PRESSURIZED ASME-CODE RECEIVER – 50 PSIG @ 450 F
ALL CS SURFACES EXTERNALLY – EPOXY COATED

TANK CAPACITY = 2200 GALLONS
CAPACITY TO OVERFLOW = 1750 GALLONS

A106 SCH. 40 CS PIPE; EXCEPT CONDENSATE LINES SCH. 80
RF FLG SO A105 XS – UP TO 1 1/2"
RF SO FLG A105 – 2" AND ABOVE
CL 3000 SW OR NPT FITTINGS – UP TO 2"

THRD HEX HEAD A105 CS PLUG
BRANCH COUPLING A105 CL 3000 – UP TO 2"
SCH. 80 1/2" AND 1" NIPPLE A106
ZINC COATED BOLTS
GASKETS – 304SS / GRAFOIL SPIRAL WOUND
ALL STEEL PIPING PRIMED & EPOXY COATED

6" WIDE FLANGE I-BEAM STRUCTURAL STEEL BASE
4" WIDE FLANGE I-BEAM UPRIGHT SUPPORTS
6"X6" SQUARE ANCHOR SUPPORT GUSSETS
ALL STRUCTURAL STEEL PRIMED & EPOXY COATED

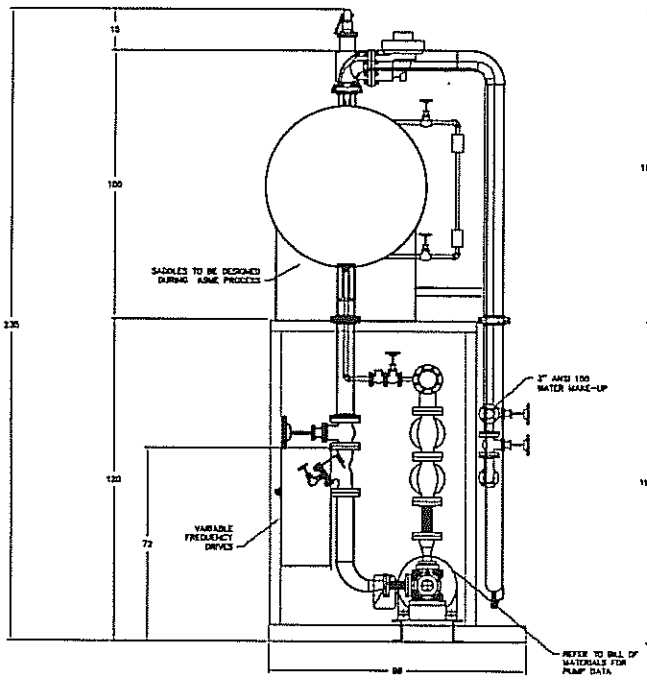

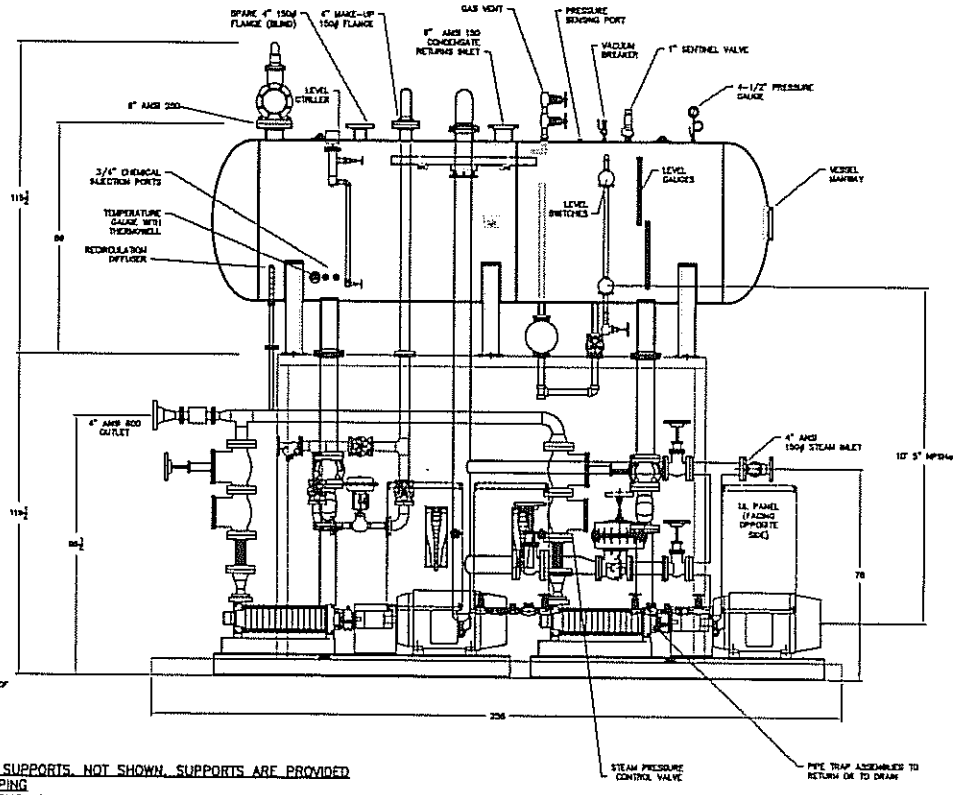

NOTES:
1 COMPLETE STRUCTURAL STEEL VERTICAL SUPPORTS, NOT SHOWN. SUPPORTS ARE PROVIDED FOR PUMP SUCTION AND DISCHARGE PIPING
2 ELECTRICAL WIRING AND CONDUIT, NOT SHOWN.
3 PRESSURE GAUGES WITH ISOLATION VALVES, INSTALLED ON PUMP DISCHARGE AND RECEIVER.
4 UL-LISTED ELECTRICAL CONTROL PANEL, NEMA 3R, 480 VOLT, 3 PHASE, DETAILS NOT SHOWN.
5 ALL DIMENSIONS ARE IN INCHES. ACTUAL DIMENSIONS MAY VARY.
6 LEVEL GAUGE INCLUDED AS SHOWN.
7 APPROXIMATE WEIGHT IS 15,000 LBS.
8 ACTUAL PACKAGE CONSTRUCTION MAY VARY FROM SPECIFICATIONS, BASED ON MANUFACTURING REQUIREMENTS AND STANDARDS. ACCEPTANCE OF SUBMITTAL AUTHORIZES MANUFACTURER BASED ON SUBMITTAL.
10 COMPLETE PACKAGE SHALL BE UL-LISTED WITH ENVIROSEP SS NAMEPLATE AND SS UL NAMEPLATE. ID TAGS SHALL BE PLACED ON STRUCTURAL FRAME.

INDECK POWER
DEAERATOR PACKAGE
80,000 #/HR @
500 TO 850 PSIG OUTPUT
(2) UNITS REQUIRED

SS UL NAMEPLATE INFO:
MODEL # 2600-DA-S
S/N – 8060062-3/4

CERTIFIED SUBMITTAL

NO.	REVISION	CHKD	APP'D	DATE
2	GENERAL CHANGES			
1	LAYOUT AND PUMPS			
NO.	REVISION	CHKD	APP'D	DATE

ACAD NAME:

THIS DRAWING IS A PRIVATE AND CONFIDENTIAL COMMUNICATION AND THE PROPERTY OF ENVIROSEP, MYRTLE BEACH, SOUTH CAROLINA. IT MUST NOT BE COPIED OR LENT WITHOUT CONSENT OF ENVIROSEP AND MUST BE PROMPTLY RETURNED WITH EARLIEST DATE/SO COMPLETION OF ORDER.

UNLESS OTHERWISE NOTED
REMOVE ALL BURRS
BREAK OUTSIDE EDGES

PROJ. NUMBER 8060062
SCALE
DRAWING NUMBER 8060062

TITLE DEAERATOR & PUMP PACKAGE LAYOUT AND SIZING

SHEET NUMBER 2 OF 2
REV. 2